W. Hunter Saussy III, P.C
400E Johnny Mercer Blvd
P.O. Box 30597
Savannah, Georgia 31410

W. Hunter Saussy, III, P.C.

Phone: (912) 898-8255
Fax: (912) 898-1882
Email: hsaussy3@comcast.net

Wednesday, August 17, 2011

Lynch Associates architects
102 E. Liberty Street, No. 108
Savannah, Georgia 31401

Attn: Andrew S. Lynch, AIA, LEED AP

Re: Review of structures at 9 Lincoln Street
Savannah, Georgia

Gentlemen:

As requested, we have performed a visual, non-destructive review of the structures at the above referenced location. The purpose of this review was to provide a general assessment of the structural condition of each structure and to provide recommendations for remedial structural repairs. This review was performed at the request of Mr. Andy Lynch.

The site contains two structures which are connected at a common wall. The south structure is a single story timber framed building and the north structure is a two story timber framed building. The following outlines our findings based on our review.

South Structure
This structure is a timber framed single story building. We observed that the east and west load-bearing walls were in very poor condition. The studs are discontinuous or ineffectively spliced at some locations. There is a large opening on the south end of the east wall which has no header. The wall top plate is non-existent. The roof joists consist of 2x4's approximately three feet on center and the roof is structurally incapable of supporting any code required roof live load. The structure has no ability to resist any lateral loads. In my opinion, this structure should be taken down.

North Structure
This structure is a timber framed two story building. There are many areas of wall and floor/roof framing which need to be reinforced or replaced. The structure is leaning in the north direction. In our opinion, the structure is capable of being repaired which might include removing and replacing the exterior siding in order to be able to bring the building back to a plumb condition. The framing of the second floor will need to be improved to support any future use. Additionally, improvements to the lateral load resisting systems in both directions will need to be included. While this structure is in

W. Hunter Saussy III, P.C
400E Johnny Mercer Blvd
P.O. Box 30597
Savannah, Georgia 31410

W. Hunter Saussy, III, P.C.

Phone: (912) 898-8255
Fax: (912) 898-1882
Email: hsaussy3@comcast.net

general very poor condition, it is possible to restore the structural integrity with proper design and construction techniques.

If there are any questions, please do not hesitate to contact me.

Yours truly,

W. Hunter Saussy III, P.E.

9 LINCOLN STREET

S A V A N N A H , G E O R G I A

CORNER OF LINCOLN STREET AND BAY LANE

SIDE VIEW OF PROPERTY FROM LINCOLN STREET

ADJACENT PROPERTY TO SOUTH ON LINCOLN STREET

LINCOLN STREET FACADE

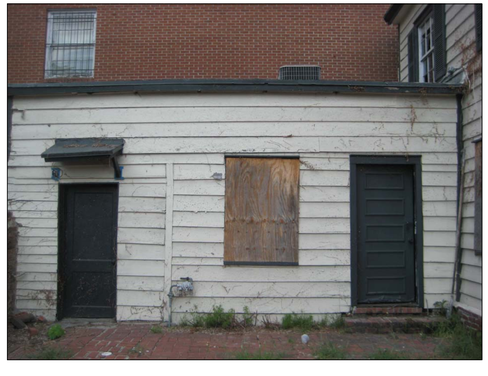

VIEW OF EXISTING SHED ADDITION FROM COURTYARD

LINCOLN STREET FACADE

A1 PHOTOGRAPHIC DOCUMENTATION

General Project Description

The proposed project includes the structural stabilization, partial demolition and adaptive reuse of an historic carriage house at 9 Lincoln Street. The building is in a BC-1 zoning district and has a 100% lot coverage allowance for commercial use. The current structure, which was previously a residential use, is in extremely poor structural and cosmetic condition and has been stripped of all interior historic fabric. The structure is comprised of a two story structure to the north and a one story flat roof shed addition structure attached on the south facade. The structure is documented as being constructed in 1820, with several modifications to the footprint of the shed addition and to the balcony of the 2-story structure documented in the 1884,1898 and 1916 Sanborn maps.

Structural Stabilization and Demolition Description

The main two story structure shows signs of significant long term structural problems in both the foundation and framing system, due to fire damage, foundation settlement and a insufficient structural capacity of existing framing members. The structure is racked 6"-9" from grade to the eave on both the north and south facade (leaning to the north). The south and west facade also show foundation settlement that has created further deflection in the floor and framing system (4"+). A structural analysis of the 2-story structure has been performed by a Georgia licensed structural engineer and his recommendation is that the structure can be repaired to meet current code requirements with significant structural stabilization and modification (see attached documentation letter). The proposed repair method is to remove the existing siding to expose the framing system and hydraulically jack the structure back into alignment so it may be reinforced with supplemental wood framing and strapping. A new concrete foundation system will be installed adjacent to the existing foundation on the interior of the building to prevent further settlement and stabilize the exterior walls. The building will then be re-sheathed with $\frac{5}{8}$" plywood, waterproofed and existing salvaged siding will be reinstalled in place.

The one story structure is in an unsalvageable condition, with a mix of poorly constructed patched together structural systems including concrete, CMU, and new/old timber framing. A structural analysis of the structure has been performed by a Georgia licensed structural engineer and his recommendation is that the structure be removed and reconstructed to meet current code requirements (see attached documentation letter). The little original historic material that still remains will be salvaged and used to repair the two story structure.

Proposed Work Description

After stabilization of the two story building is complete, a proposed one story addition will be constructed in the location of the original one story structure. The proposed addition will be in keeping with with the height and mass of the existing structure, but will be 5' deeper to make the new space a functional width while maintaining the existing courtyard space. A rooftop terrace is proposed on the new addition space. The proposed structure will be a mix of solid and void that plays on the existing configuration of the original structure. The solid area material will be 18" horizontal panels with aluminum reveal channels that mimic the existing 8" wide lap siding on the two story structure. A glass partition system and glass railing system will connect the solid bay to the existing two story structure. A contemporary spiral stair is proposed in front of the solid bay and will act as a second means of egress from the roof terrace and second floor of the main building. The existing courtyard wall entry opening will be modified to allow for greater egress width and will be centered on the glass partition system.

The existing two story building will be restored to its original configuration with only minor modifications proposed on the south facade. These modifications include replacement of one existing first floor door with a 15-lite french door, conversion of one second floor window to a 15-lite french door and relocation of an existing first floor window to align with a window above. Other modifications include adding single panel louvers to two first floor windows on the north facade and relocation of all mechanical condensing units to the north roof.

All colors and finishes will be submitted to HRB staff prior to installation.

G12 PROJECT DESCRIPTION

N

NTS

A12 CONTEXT MAP

LYNCH associates architects

102 East Liberty Street, No.108
Savannah, Georgia 31401
T 912.349.5116
F 912.349.5119

www.lyncharch.com

9 Lincoln Street

Jeff Notrica
Inman Park Properties of Savannah
PO Box 10027
Savannah, GA 31412

Revisions

No	Date	Description

PROJECT INFORMATION

Scale	AS NOTED
Date	AUGUST 18, 2011
Project No.	1121.00
Drawing No.	

A1

VIEWS OF STRUCTURE LEANING TO NORTH

PLUMB LINE DROPPED FROM SECOND FLOOR - 6" OVERALL DIMENSION OUT OF LINE

J1

EXTERIOR PHOTOGRAPHS TO ILLUSTRATE BUILDING RACKING

A1

INTERIOR PHOTOGRAPHS AT EXISTING SHED

LYNCH
associates
architects

102 East Liberty Street, No.108
Savannah, Georgia 31401
T 912.349.5116
F 912.349.5119

www.lyncharch.com

9 Lincoln Street

Jeff Notrica
Inman Park Properties of Savannah
PO Box 10027
Savannah, GA 31412

Revisions

No	Date	Description

PROJECT INFORMATION

Scale	AS NOTED
Date	AUGUST 18, 2011
Project No.	1121.00
Drawing No.	

A2

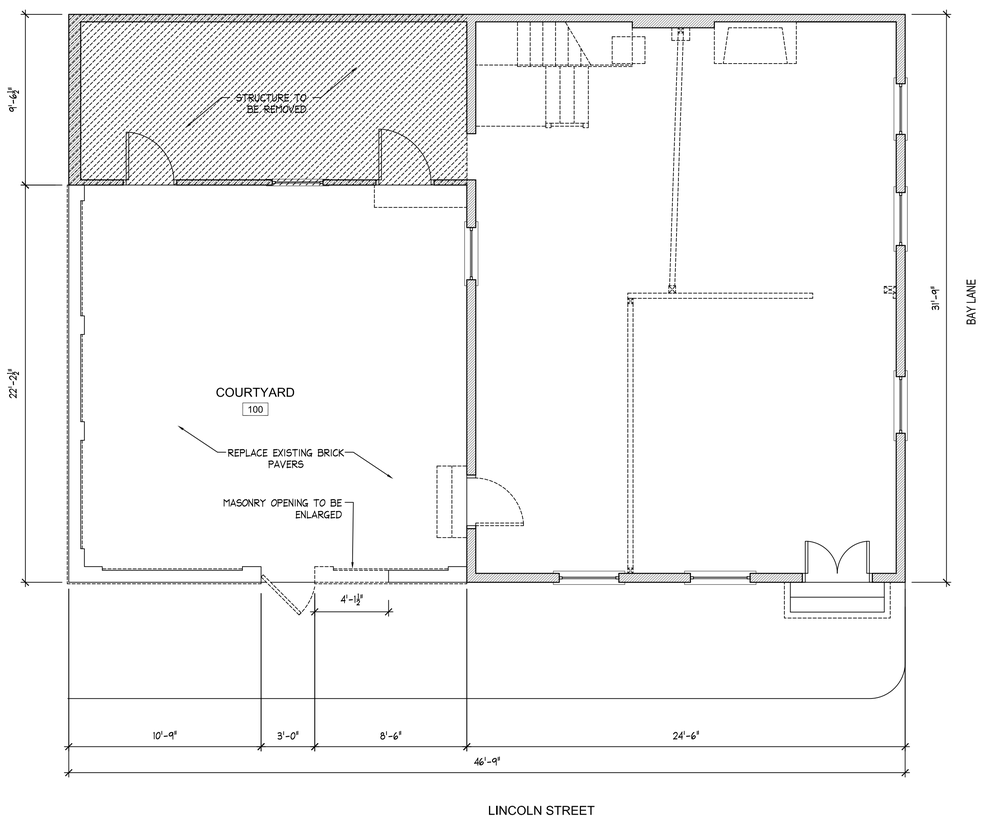

1/4" = 1'-0"

A1 EXISTING FLOOR PLAN

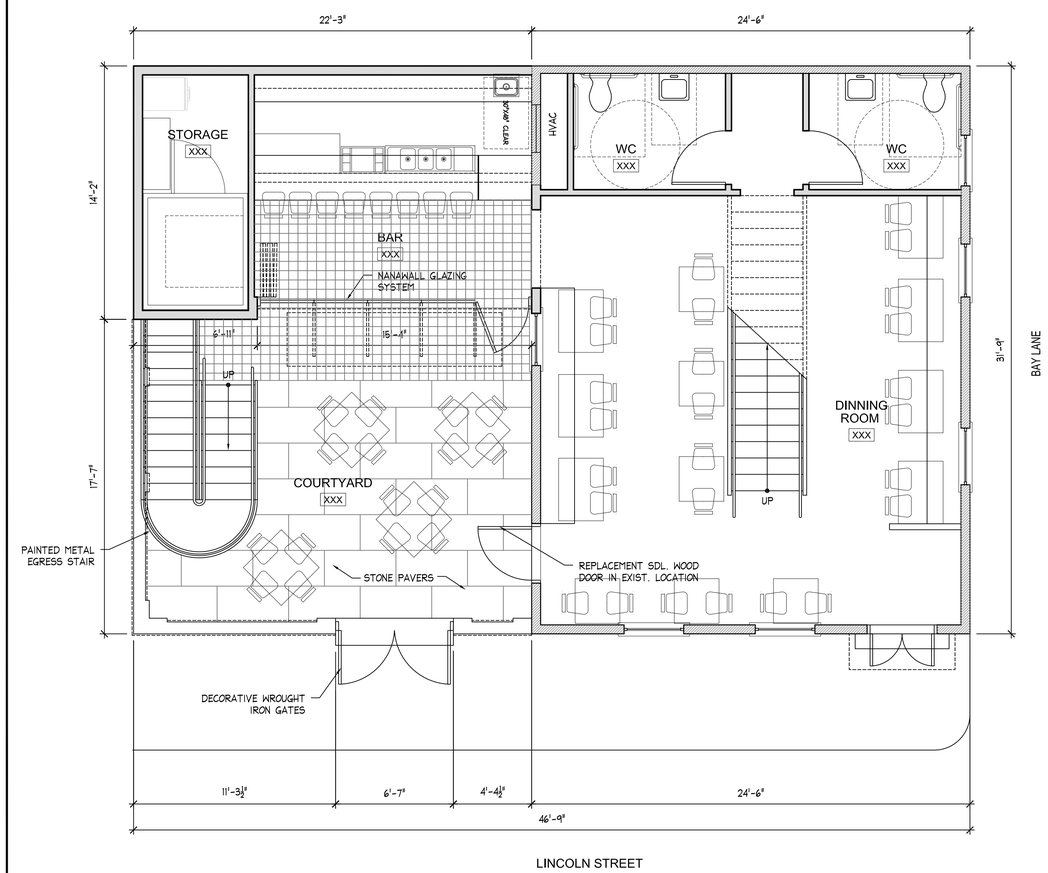

1/4" = 1'-0"

A11 PROPOSED FLOOR PLAN

LYNCH
associates
architects

102 East Liberty Street, No.108
Savannah, Georgia 31401
T 912.349.5116
F 912.349.5119

www.lyncharch.com

9 Lincoln Street

Jeff Notrica
Inman Park Properties of Savannah
PO Box 10027
Savannah, GA 31412

Revisions

No	Date	Description

EXISTING AND PROPOSED FIRST FLOOR PLAN

Scale	AS NOTED
Date	AUGUST 18, 2011
Project No.	1121.00
Drawing No.	

A3

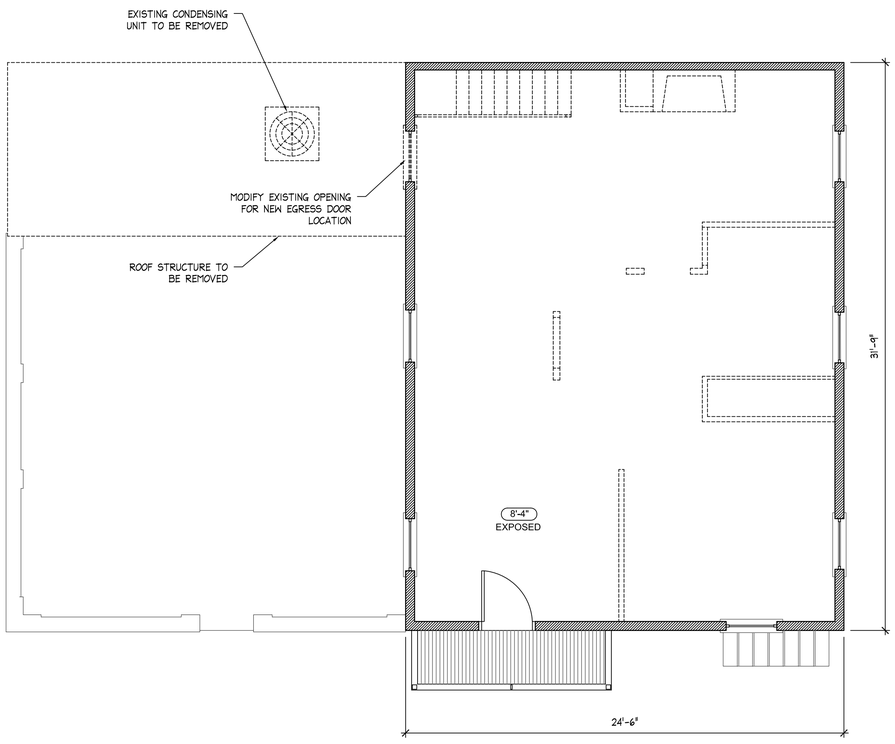

1/4" = 1'-0"

A1 EXISTING FLOOR PLAN

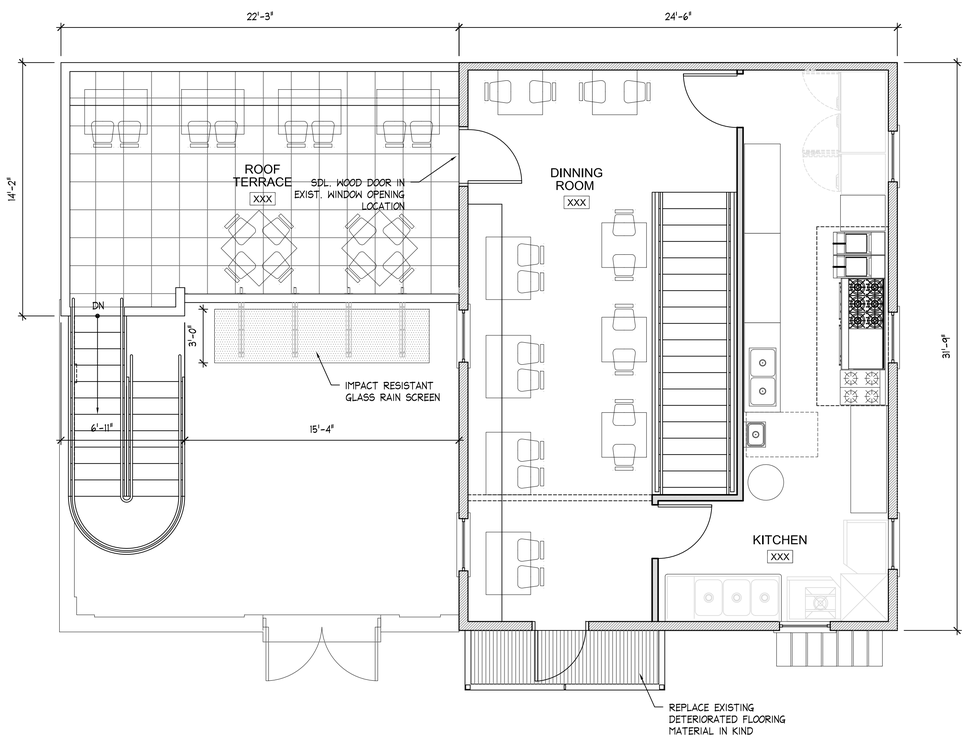

1/4" = 1'-0"

A11 PROPOSED FLOOR PLAN

LYNCH
associates
architects

102 East Liberty Street, No.108
Savannah, Georgia 31401
T 912.349.5116
F 912.349.5119

www.lyncharch.com

9 Lincoln Street

Jeff Notrica
Inman Park Properties of Savannah
PO Box 10027
Savannah, GA 31412

Revisions

No	Date	Description

EXISTING AND PROPOSED 2ND FLOOR PLAN

Scale	AS NOTED
Date	AUGUST 18, 2011
Project No.	1121.00
Drawing No.	

A4

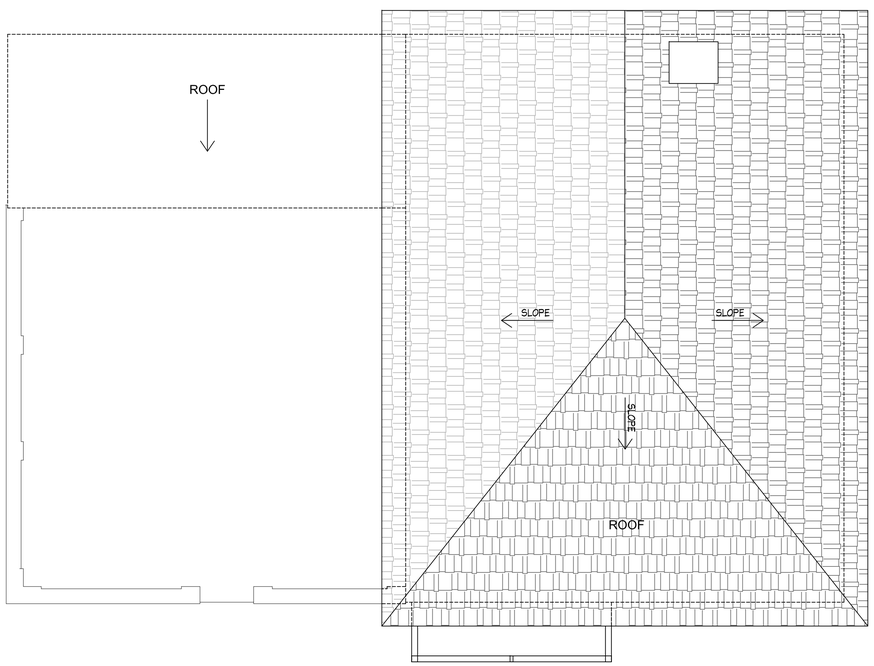

1/4" = 1'-0"

A1 EXISTING ROOF PLAN

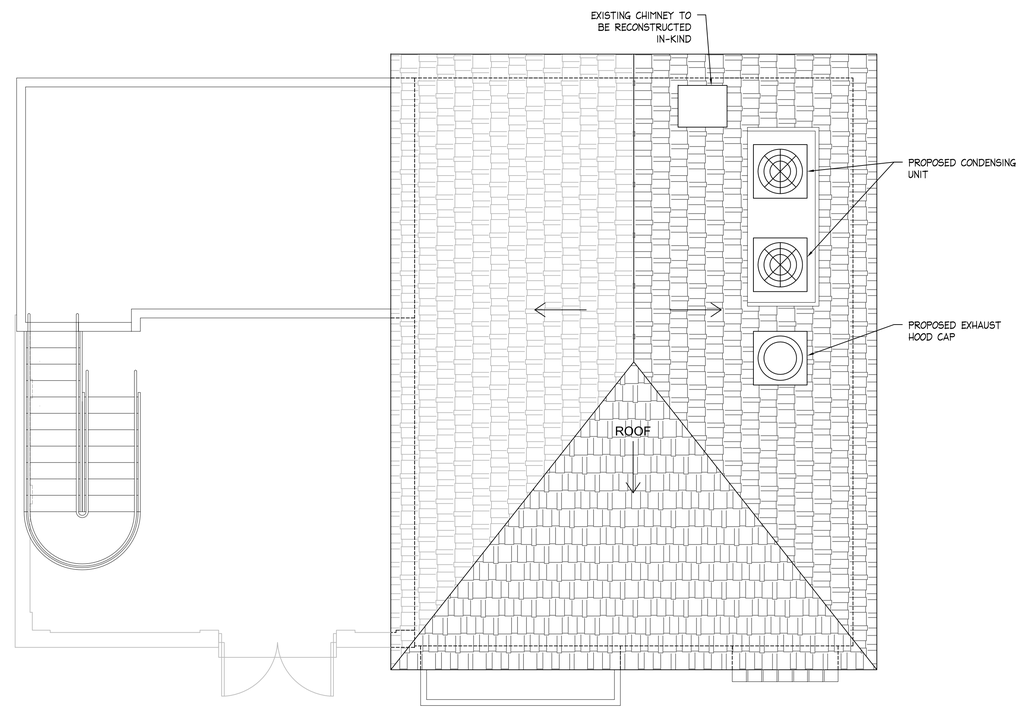

1/4" = 1'-0"

A11 PROPOSED ROOF PLAN

LYNCH associates architects

102 East Liberty Street, No.108
Savannah, Georgia 31401
T 912.349.5116
F 912.349.5119

www.lyncharch.com

9 Lincoln Street

Jeff Notrica
Inman Park Properties of Savannah
PO Box 10027
Savannah, GA 31412

Revisions

No	Date	Description

PROPOSED ROOF PLAN

Scale	AS NOTED
Date	AUGUST 18, 2011
Project No.	1121.00
Drawing No.	

A5

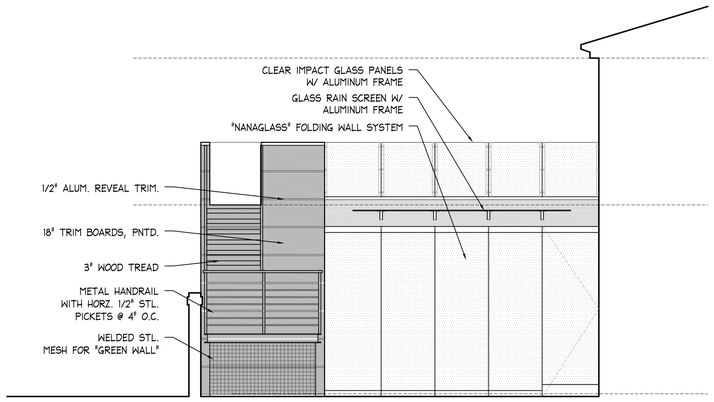

1/4" = 1'-0"

H1 PROPOSED COURTYARD ELEVATION

1/4" = 1'-0"

H8 PROPOSED FRONT ELEVATION

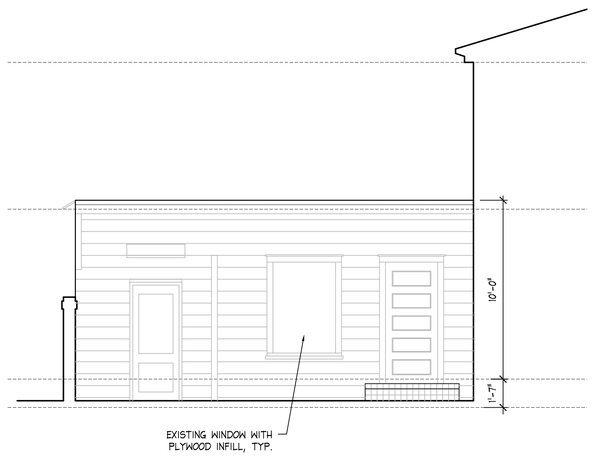

1/4" = 1'-0"

A1 EXISTING COURTYARD ELEVATION

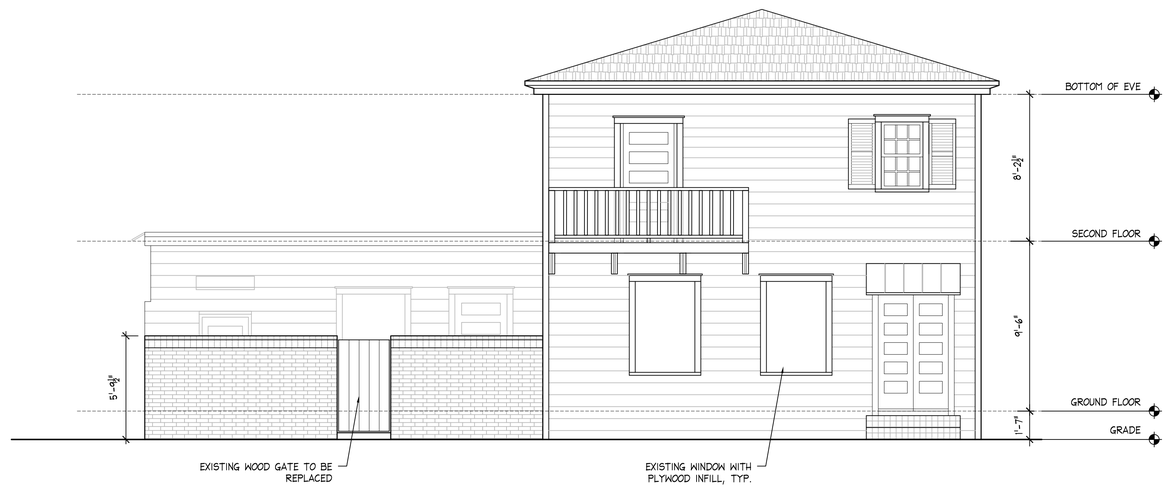

1/4" = 1'-0"

A8 EXISTING FRONT ELEVATION

LYNCH
associates
architects

102 East Liberty Street, No.108
Savannah, Georgia 31401
T 912.349.5116
F 912.349.5119

www.lyncharch.com

9 Lincoln Street

Jeff Notrica
Inman Park Properties of Savannah
PO Box 10027
Savannah, GA 31412

Revisions

No	Date	Description

EXISTING AND PROPOSED ELEVATIONS

Scale	AS NOTED
Date	AUGUST 18, 2011
Project No.	1121.00
Drawing No.	

A6

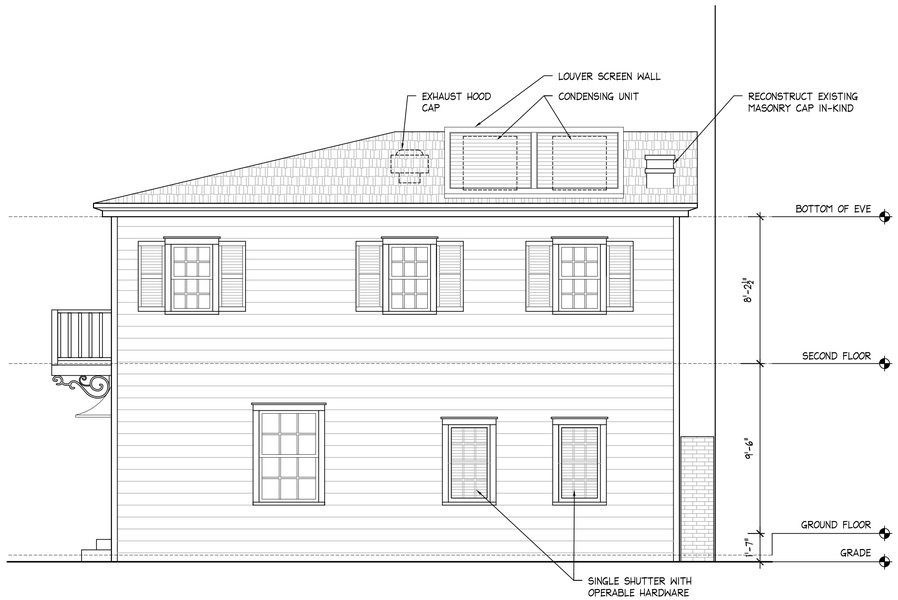

1/4" = 1'-0"

H1 PROPOSED LANE SIDE ELEVATION (NORTH)

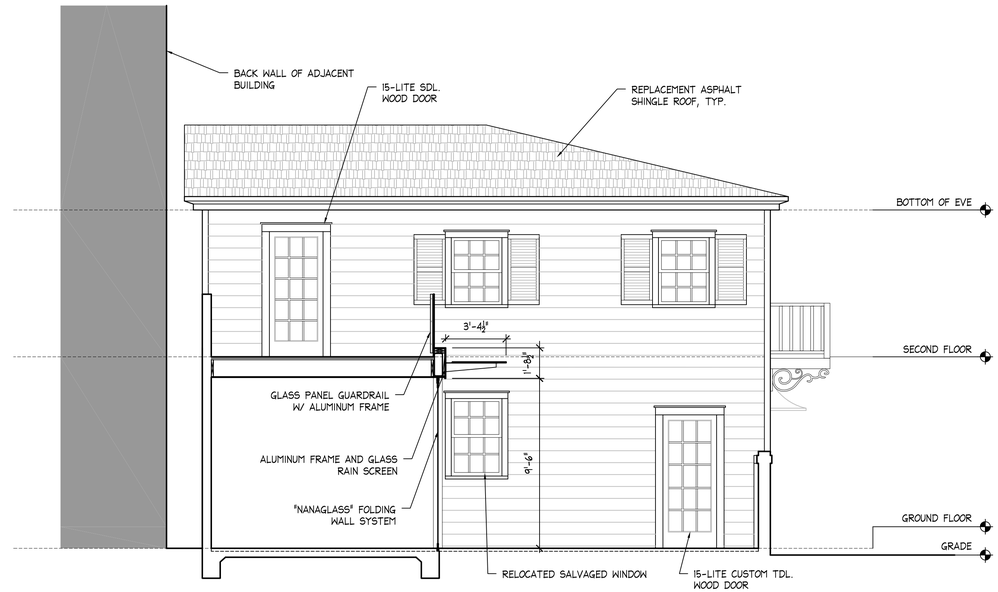

1/4" = 1'-0"

H10 PROPOSED COURTYARD ELEVATION (SOUTH)

1/4" = 1'-0"

A1 EXISTING LANE SIDE ELEVATION (NORTH)

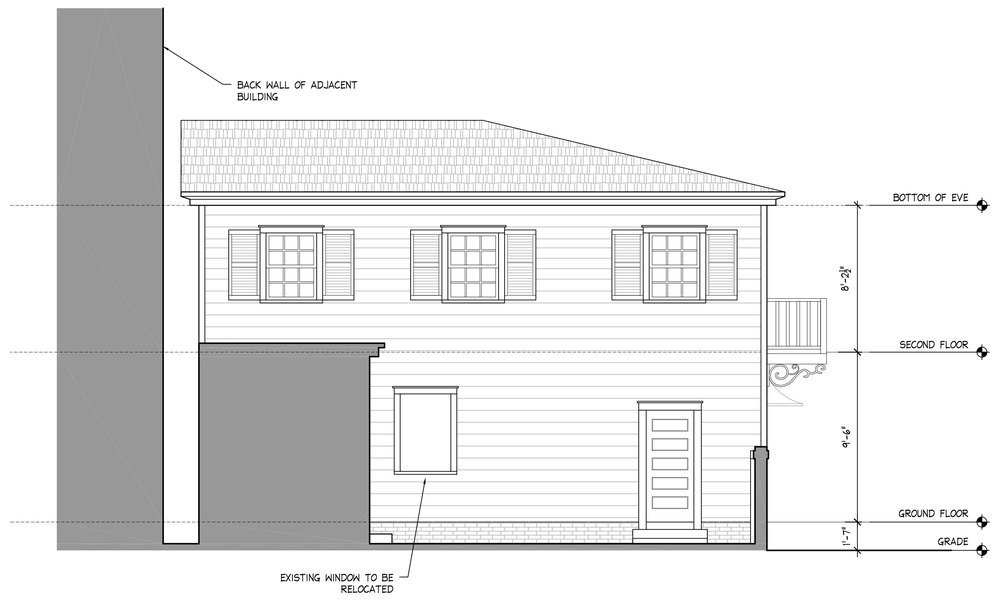

1/4" = 1'-0"

A10 EXISTING COURTYARD ELEVATION (SOUTH)

LYNCH associates architects

102 East Liberty Street, No.108
Savannah, Georgia 31401
T 912.349.5116
F 912.349.5119

www.lyncharch.com

9 Lincoln Street

Jeff Notrica
Inman Park Properties of Savannah
PO Box 10027
Savannah, GA 31412

Revisions

No	Date	Description

EXISTING AND PROPOSED ELEVATIONS

Scale	AS NOTED
Date	AUGUST 18, 2011
Project No.	1121.00
Drawing No.	

A7

RENDERING - COURTYARD VIEW

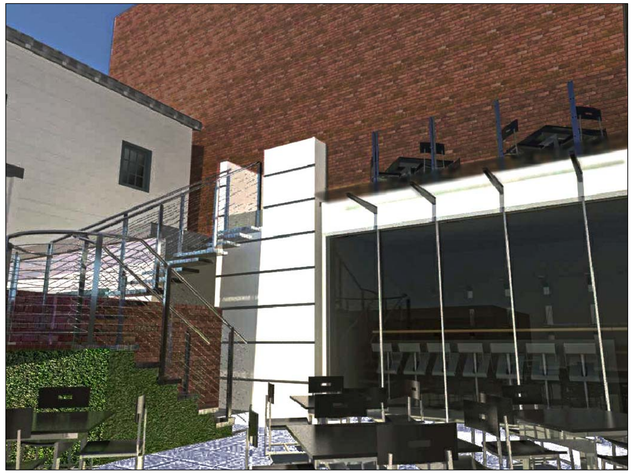

RENDERING - STREET VIEW

RENDERING - BIRDSEYE VIEW

NTS

A1 CONCEPT RENDERINGS

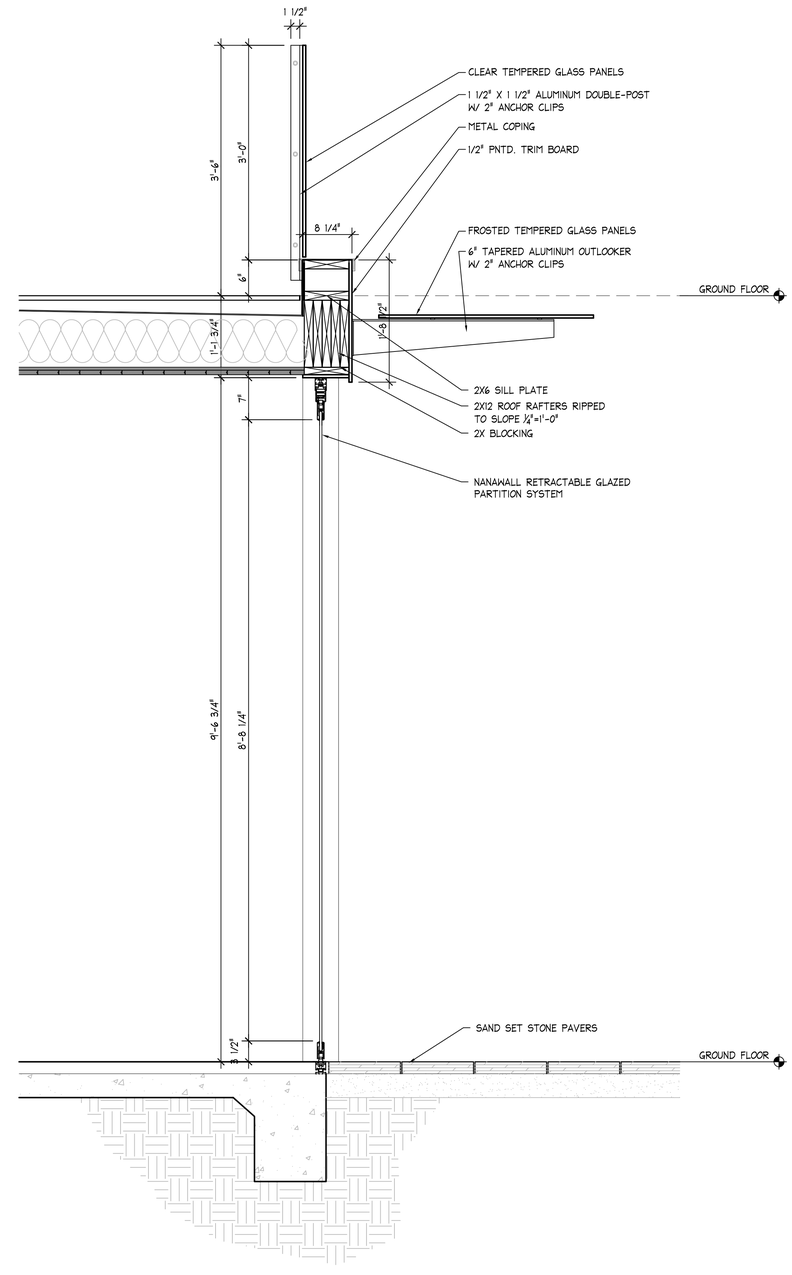

1" = 1'-0"

A10 WALL SECTION

LYNCH associates architects

102 East Liberty Street, No.108
Savannah, Georgia 31401
T 912.349.5116
F 912.349.5119

www.lyncharch.com

9 Lincoln Street

Jeff Notrica
Inman Park Properties of Savannah
PO Box 10027
Savannah, GA 31412

Revisions

No	Date	Description

PROPOSED RENDERING & WALL SECTION

Scale	AS NOTED
Date	AUGUST 18, 2011
Project No.	1121.00
Drawing No.	

A8

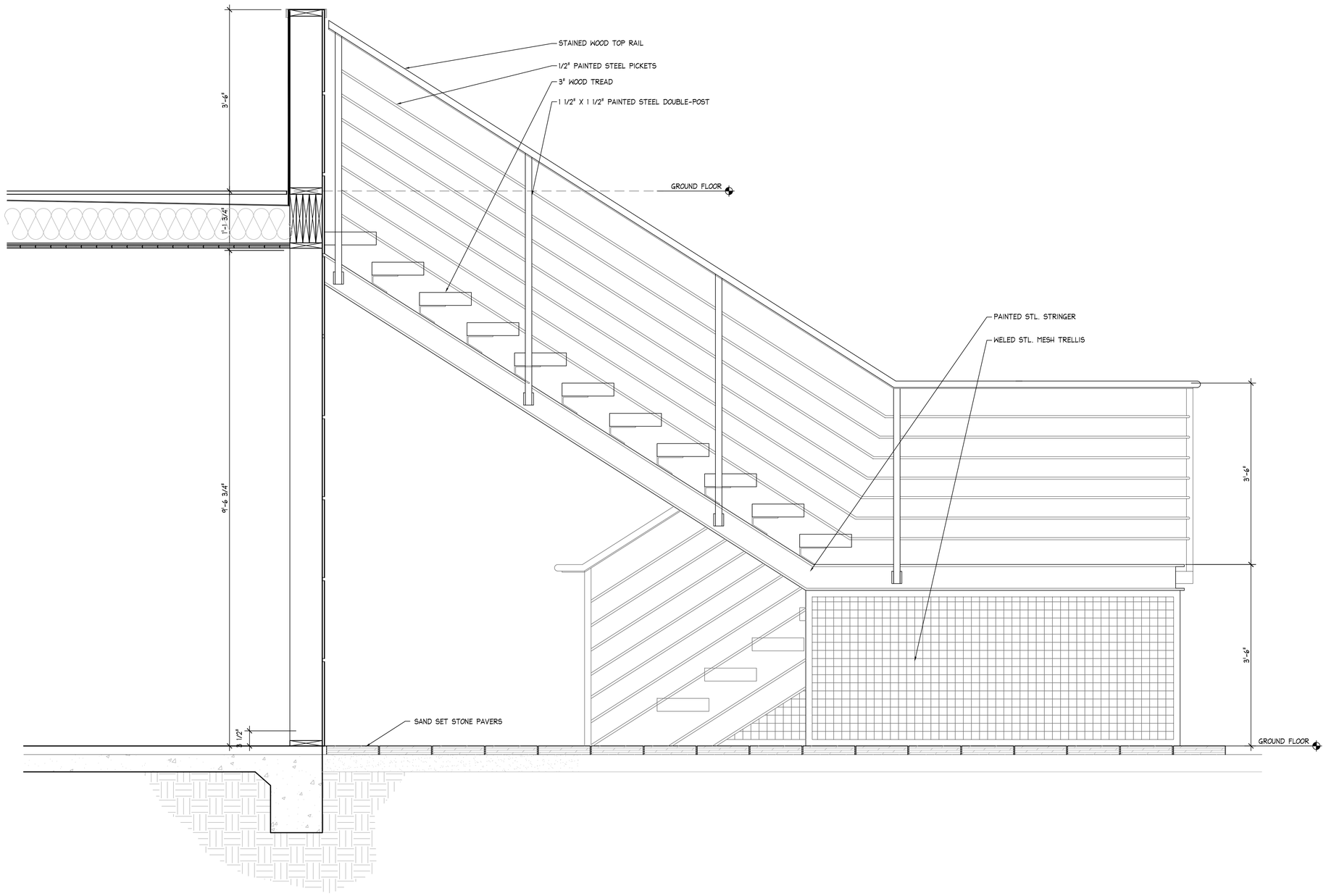

1" = 1'-0"

A1 STAIR SECTION

LYNCH
associates
architects

102 East Liberty Street, No.108
Savannah, Georgia 31401
T 912.349.5116
F 912.349.5119

www.lyncharch.com

9 Lincoln Street

Jeff Notrica
Inman Park Properties of Savannah
PO Box 10027
Savannah, GA 31412

Revisions

No	Date	Description

PROPOSED EXTERIOR STAIR & WALL SECTION

Scale	AS NOTED
Date	AUGUST 18, 2011
Project No.	1121.00
Drawing No.	

A9

NanaWall® SL25 The All Glass Opening Window Wall System without Vertical Stiles

The SL25 all glass opening window wall system encloses a space, such as a balcony, porch, under a deck or part of a solarium, but easily slides and stacks away to make the space open to the exterior.

Versatile and Functional

When closed, this system allows unobstructed views while providing wind protection for a balcony, stadium suite, or other similar application. This system offers the designer new dimensions in creating large, exterior glass walls that can be opened.

In apartment settings, for example, the SL25 effectively increases apartment space, providing high-rise residents with a more functional and comfortable balcony area in which to relax, entertain, or set up patio gardens.

Light Commercial Swing Door Option

A swing door with a floor door closer is available for light commercial applications.

Florida Approval

The SL25XXL with a standard sill and reinforced turn panel is Florida state wide approved with Product Approval number FL 14404. This approval includes segmented units. This information with limitations can be viewed at www.floridabuilding.org.

Engineered to handle high wind loads for use in many high rise applications

Achieved DP rating of +40 psf /-45 psf per independent, ASTM E-330 structural load testing of a unit with a standard sill, reinforced turn panel. 1/2" glass thickness and panel size of 2' 7" x 7' 8". The maximum gap between panels is 1/8".

Noise-resistant

Sound resisting NanaWall Systems can shut out some of the inevitable noises of the busy urban environment, creating an oasis of calm when desired. The NanaWall® SL25 with 5/16" (8 mm) tempered glass tested to an STC value of 17.

Wind resistant

When shut, the wind resistant panels of the SL25 offer some protection against rain and snow. Partially or fully opened, the SL 25 allows users to enjoy sunshine, breezes and the natural environment.

Creating Comfort and Lowered Energy Costs

The flexibility of the SL25 NanaWall® also improves the overall ambience, providing more temperate interiors and reduced energy consumption.

Structural Protection

Building owners will appreciate the many structural benefits of the SL25. For example, in addition to cutting down energy costs, by protecting the building structure from the wear and tear of the elements, the NanaWall reduces deterioration – hence saving money in costly repair work.

Design Freedom

Custom sizes - heights up to 9'0" (2750 mm) and panel widths up to 2'7" (800 mm) are possible. Units can be with a large number of panels stacking to one or both sides of an opening. Besides straight segments, open corners from 90° to 180°, as well as segmented angled turns to enclose circular areas, are possible. Stacking is generally to the inside, but for ground floor applications, stacking on the outside is possible.

Choice of Finishes - Tempered, laminated or Ornilux Bird Safe Glass

Besides the 50 finishes shown in the NanaWall Powder Coating Finish Chart in the front part of this binder, the full range of RAL colors are also available in both a standard gloss and matte powder coated finishes. A RAL color chart is available on request. Anodized finishes are also available.

Secure with Patented Locking Hardware

Two point locking with concealed top and bottom latches that operates by pull of a spring tensioned cable secures the turn panel to be opened first (US Patent No. 6,618,994). Other panels are secured by carriers at each upper corner and guides at each bottom corner. For door applications, instead of guides at each bottom corner, a special interlock between panels is used. A recessed track is also possible with this application as well as the option of operation from both sides.

Simplified Installation

With an adjustable head jamb and bottom track, the SL25 System can be installed to fit into many existing openings that may not be level.

Continued, Long-Term Satisfactory Operation

Ease of operation to quickly open or close as the two carrier suspension system allows each single panel to be easily slid. State-of-the-art hardware with sealed ball bearing carriers. Long term ease of operation with adjustable head jamb.

Complete Single Sourced System

A complete, precision built system with pre-fitted hardware is supplied.

Complete Coordinated Glass Wall

With the SL25, a coordinated glass wall can be provided with SL45 matching fixed windows, transoms, and tilt-turn windows. For adjacent walls, matching folding and French doors can also be provided.

NanaScreen™

The NanaScreen™, a series of collapsible pleated screen panels riding on a single track is available as an option. The system can be installed within the opening or, with extended tracks, be hidden out of view when not in use. See the Screens section for more details.

General Description

The all glass SL25 is an individual, single panel sliding system on a single track with no stiles but with aluminum rails and frame. Any custom panel size within the limitation of the Panel Size Chart is possible. Weight of a sliding panel for the SL 25 standard version is not to exceed 36 kg (80 lbs) and for the SL 25 XXL version it is not to exceed 65 kg (143 lbs). An end panel, on the side where the panels stack, is a turn panel; there are many configurations possible, see “Possible Configurations” for possibilities. Stack must be 90° to the opening.

Frames & Panels

The nominal head jamb thickness is 1 3/4” (45 mm), the nominal bottom track thickness is 2 1/16” (53 mm) and the nominal side jamb thickness is 1 5/16” (34 mm) of extruded aluminum. The nominal thickness of the height compensating profile above the head jamb is 2” (50 mm). All pins and screws to assemble the frame are provided. The rails of the sliding panels and swing panels are extruded aluminum with nominal panel thickness of 1 1/16” (27 mm).

Finishes

In addition to the choices from the NanaWall Powder Coating Finish Chart, the full range of RAL high gloss and matte powder coatings are also available. Anodized finishes are also available.

Glazing

Glazing can be either tempered or laminated. Glass thickness between ¼” (6 mm) and 1/2”(12 mm) is to be determined based on height of unit and design wind load requirements. Ornilux Bird Safe Glass is also available.

Weatherstripping

As shown in cross-section drawings, all weather stripping consisting of APTK and brush seals are provided for sealing between panels and frame.

Top Hung Sliding/Turning Hardware

For sliding, attached to the upper corners of each panel are load bearing stainless steel unidirectional carriers with two rollers each. Each roller has sealed bearings and is coated with toughened Polyamide to ensure sound free running and resistance to extreme temperature.

Patented Locking Hardware

Two point locking with concealed top and bottom latches secures the turn panel that opens first. The mechanism is operated by the pull of a spring tensioned cable. (US Patent No, 6,618,994). Other options such as a knob to operate the cable from the exterior, lever handles, etc. are also available.

Light Commercial Swing Door Option

A swing door with a floor door closer is available for light commercial applications with the SL25XXL system. The swing door can be as wide as 3'0" (915 mm). A 10" (250 mm) kickplate, commercial push/pull handles, and dead bolt engaging into floor are standard.

NOTE: The SL25 is not a secure, burglar resistant system.

Balcony Application

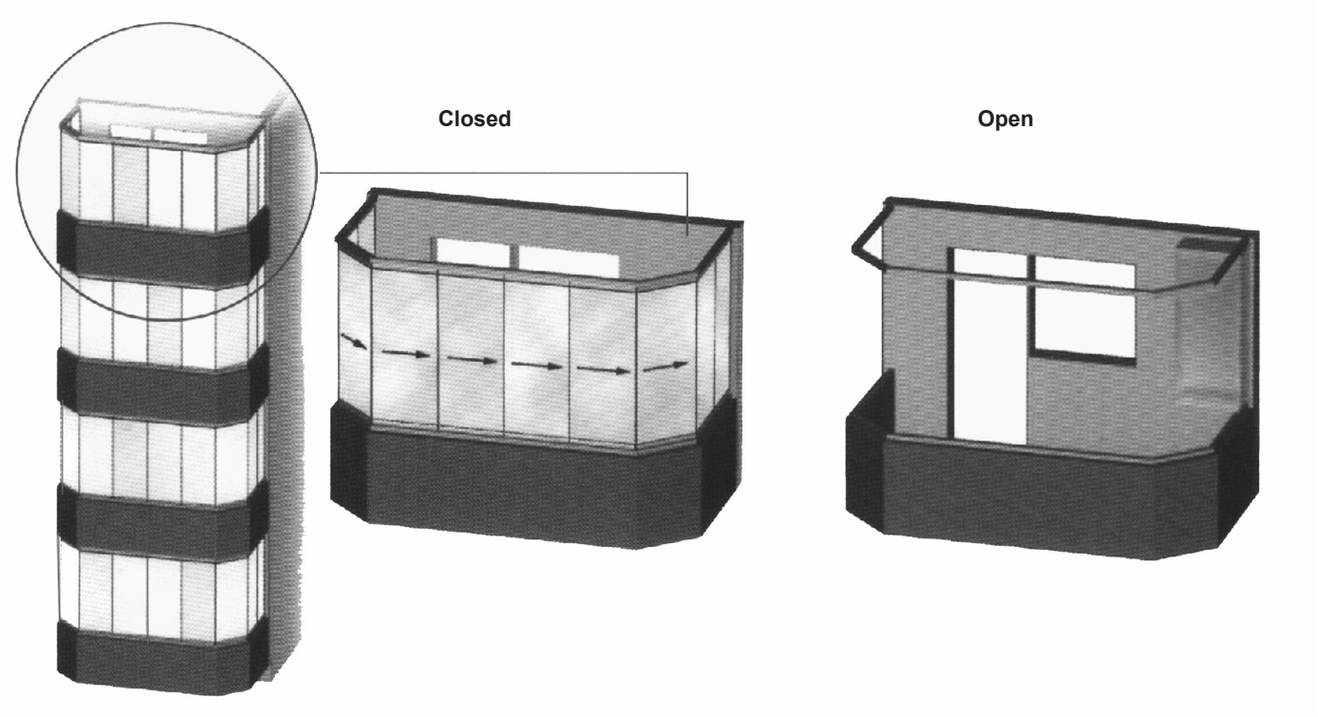

4 Panel Unit Example

Unit in Closed Position

Unit in Open Position

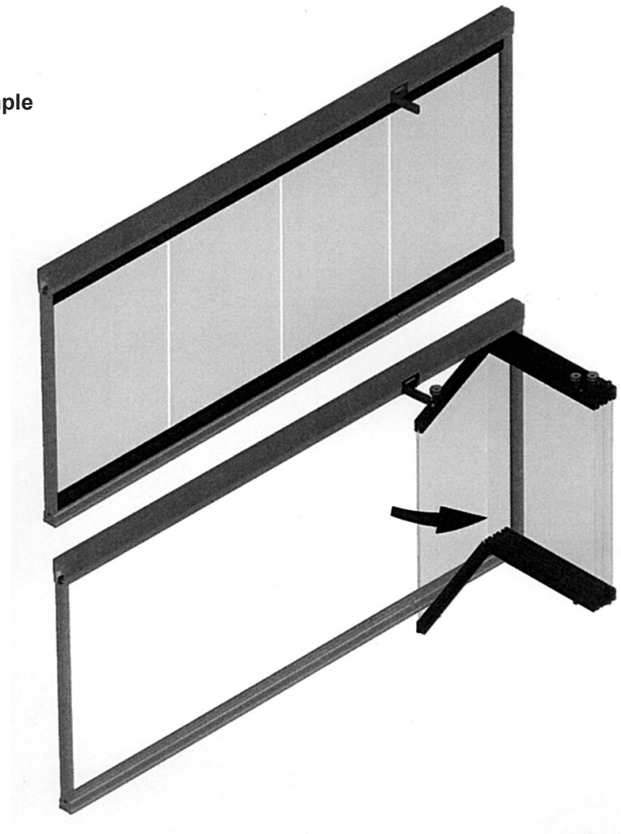

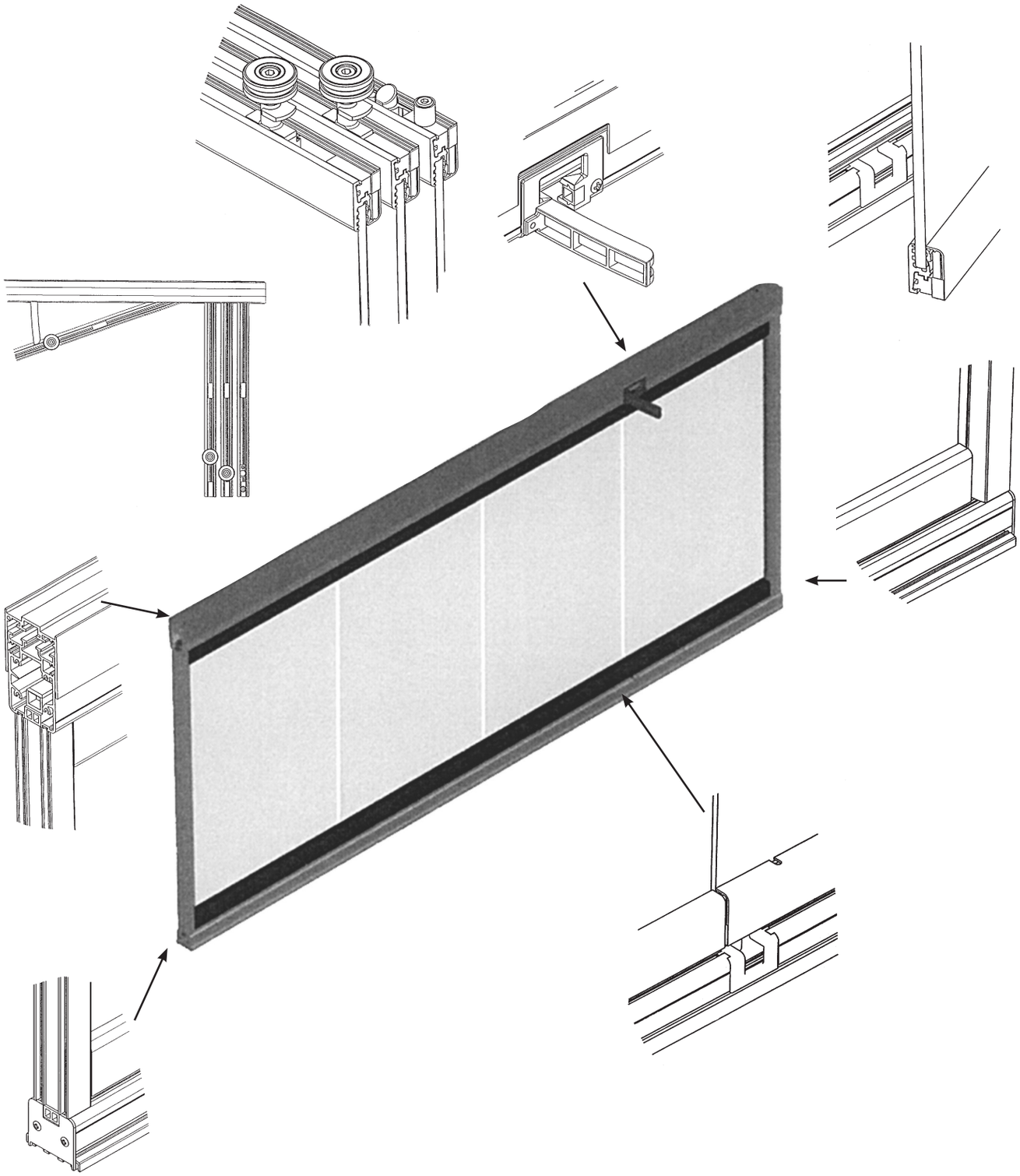

NOTE: English dimensions are approximate. Dimensions in parenthesis are in millimeters

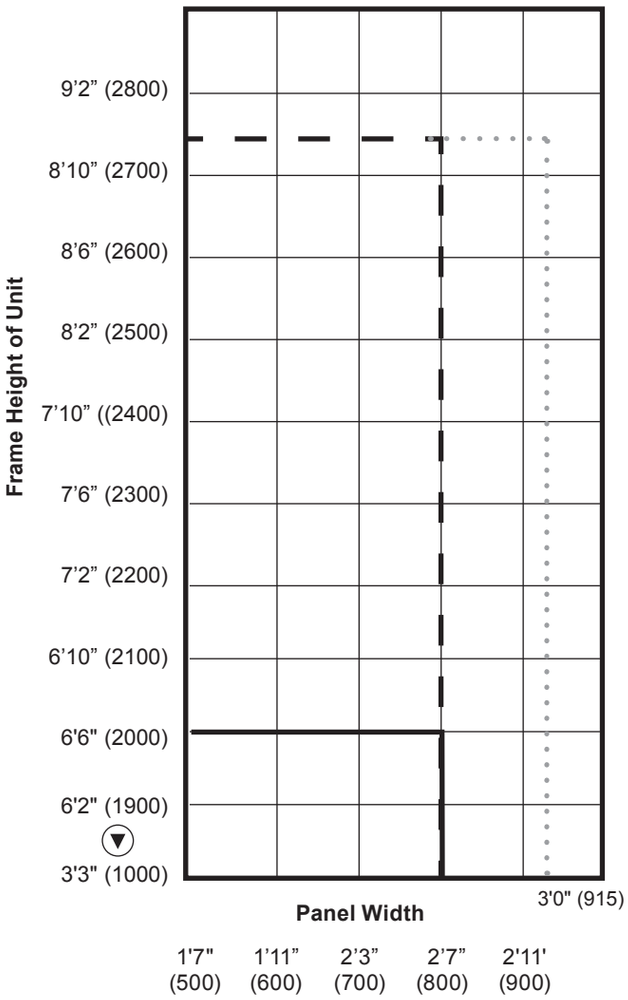

Any custom size is possible up to the maximum size shown.

Solid dark line on chart indicates maximum frame height possible for a given maximum panel width for SL25 standard version with either 1/4” (6mm) or 5/16” (8 mm) glass.

Broken line on chart indicates maximum frame height possible for a given maximum panel width for a SL 25 XXL version with either 3/8” (10 mm) or 1/2” (12 mm) glass.

Dotted line on chart indicates maximum height and width of a light commercial swing door on an SL25XXL unit.

Depending on panel width, 8 - 12 panels can be stacked to each side. Depending on size of panels, stacking of more panels may be possible. Please consult NanaWall.

The unit width is the panel width multiplied by the number of panels.

▼ Indicates height decrease

STANDARD SILL		
TYPE OF TEST	**REINFORCED LOCKING**	**STANDARD LOCKING**
*Structural Load Deflection ASTM E-330: pass 1/2" (12 mm) glazing **See design windload charts for other sized panels** *Note that the structural test pressures were 50% higher than the design pressures*	Design Pressure Positive @40 psf (1900 Pa) Design Pressure Negative @45 psf (2150 Pa)	Design Pressure Positive @25 psf (1190 Pa) Design Pressure Negative @45 psf (2150 Pa)
***Structural Load Deflection ASTM E-330: pass 5/16" (8mm) glazing	--	Design Pressure Positive @ 20 psf (950 pa) Design Pressure Negative @ 20 psf (950 Pa)

NOTES
*Excerpts of results of a 10'6" W x 8'2" H four panel unit with ½" (12 mm) tempered glazing tested by Architectural Testing Inc., Fresno, CA, an independent testing laboratory, in April 2010.
***Excerpts of results of a 10' 7 1/2" W x 6'6" four panel unit with 5/16" (8 mm) glass tested by Architectural Testing, Inc., Fresno, CA, an independent testing laboratory, in July 2005.

**Acoustical Performance	With 5/16" (8mm) tempered glass achieved STC and Rw value of 17.

NOTES
**Excerpts of results of a 13'2 7/8" W x 5' 0 ¼" H five panel unit tested by Nusing Mobile Trennwandtechnile, Munster, Germany, an independent testing laboratory.

SPECIAL WATER TEST*

* Special Water Test with 2" W x 1 3/16" H aluminum tube under standard sill with L bracket that extends 1" W on inside and 2 3/8" H. (See drawing below). Total Sq. footage of unit = 58/08 ft^2; total water sprayed on unit during 15 min. of testing = 58.08 ft^2 x 5 gal./ft^2/hr x .25 hr. = 72.6 gallons (9293 fl.oz.)

Did not follow the standard test procedure of test failure upon water penetration as defined by test standards. In this case water penetration was allowed and instead the amount of water penetration was measured.

TYPE OF TEST	AMOUNT OF WATER PENETRATION MEASURED			
**Water Penetration: ASTM E 331 (water spray for 15 minutes at the rate of 5 gal./f^2/h (3.4 L/m^2/min.)	@ 0 psf (0 Pa)	3.1 fluid oz.	(.091 L)	(.03% of total water sprayed)
	@ 1.57 psf (75 Pa)	14.6 fluid oz.	(.43 L)	(.16% of total water sprayed)
	@ 6.24 psf (300 Pa)	144 fluid oz.	(4.26 L)	(1.55% of total water sprayed)

**Excerpts of results of a 3 panel unit wit' 4 1/2" (2250 mm) tested by Architectural Testing, Inc., Fresno, Ca, an independent testing laboratory, in October 2010.

Detail 2.0 Sill

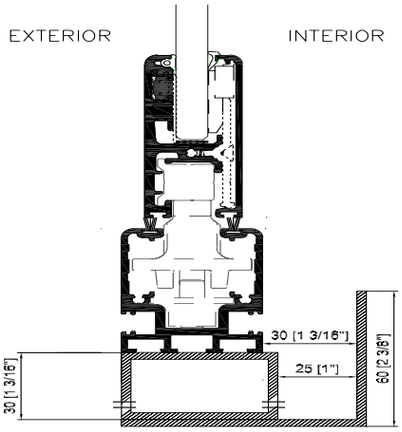

As there can be many other possibilities, please submit your ideas and sketches to NanaWall Systems, Inc. for evaluation.

Shown are inward opening possibilities. Outward opening is also possible

Unit in closed position

Unit in open position

1.

2.

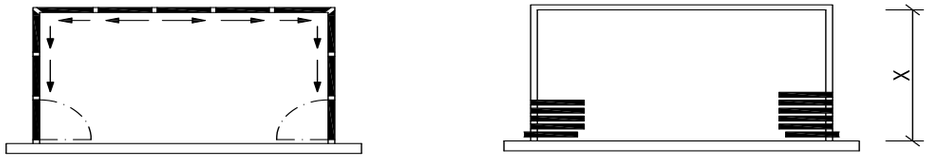

3.

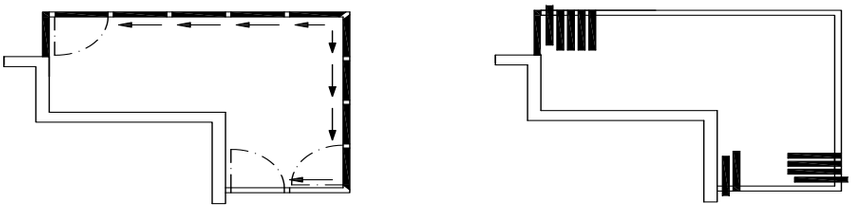

4.

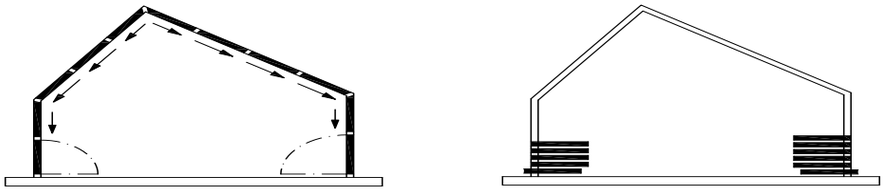

5.

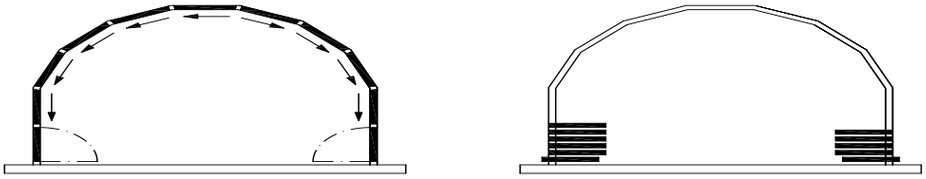

6.

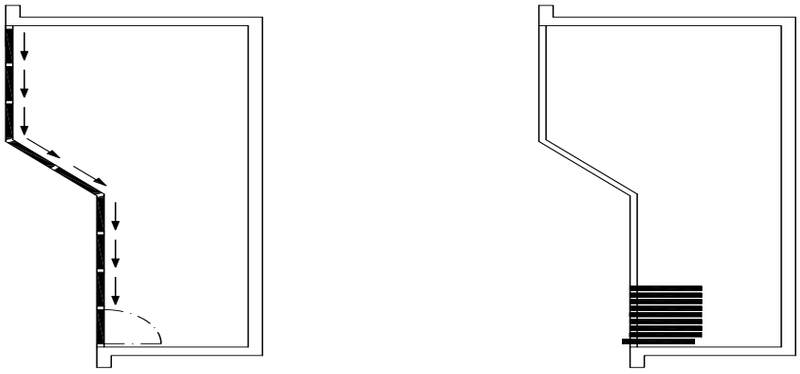

Note - when panels move around corners, there should be sufficient clearance from adjacent post, etc.

Some Typical Basic Elevations

Looking from the inside

I-3H1R

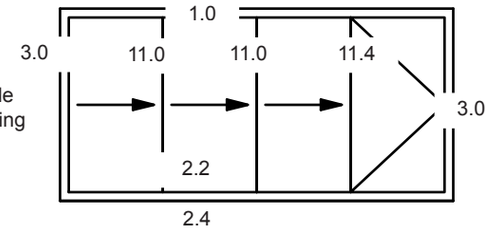

A - 3H1R

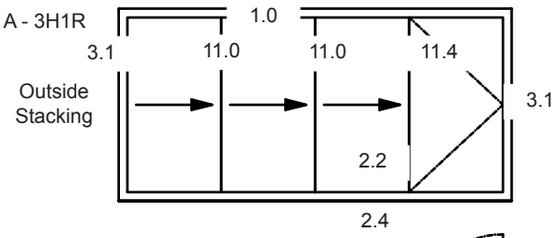

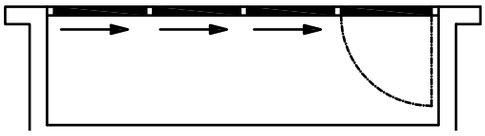

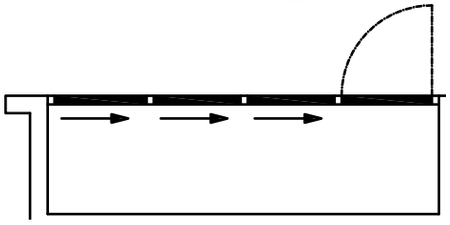

I-1L2H 3H1R

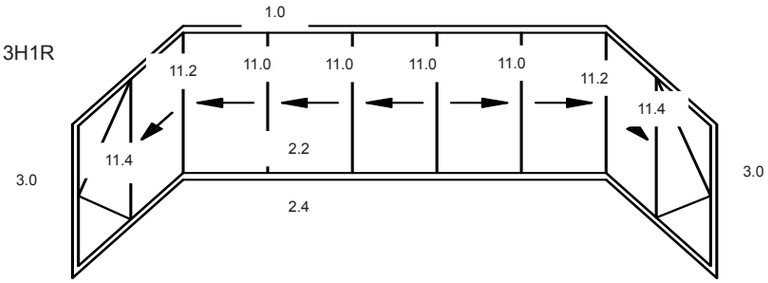

I-1L4H 4H1R

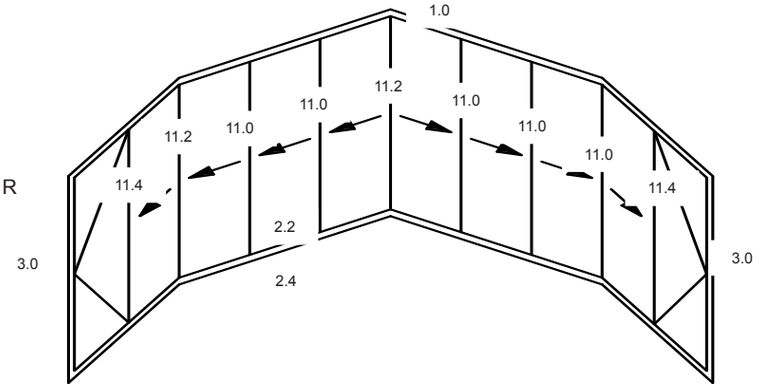

Light Commercial Swing Door Option - only with SL25XXL.

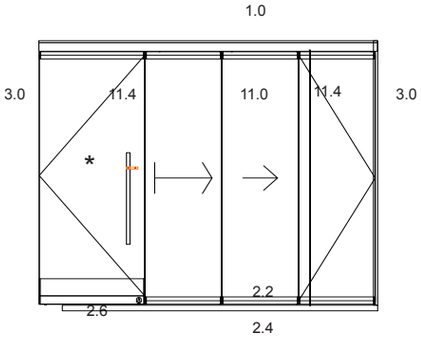

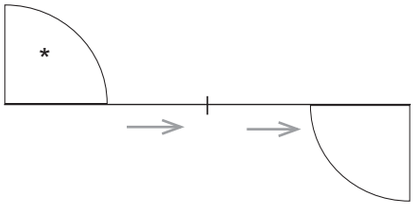

*Shown is a commercial swing door on the left. Other panels have to stack on the opposite side

Detail 1.0
Head Jamb (with head compensating profile)

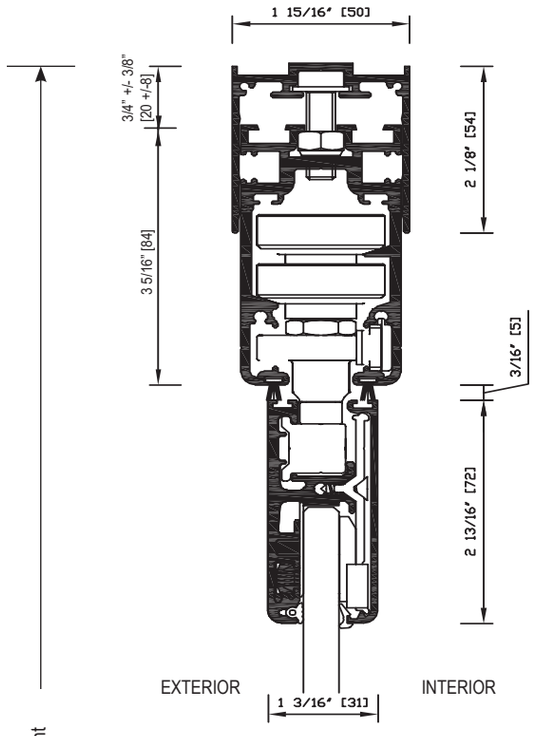

Detail 2.6 Light Commercial Swing Door (bottom rail)

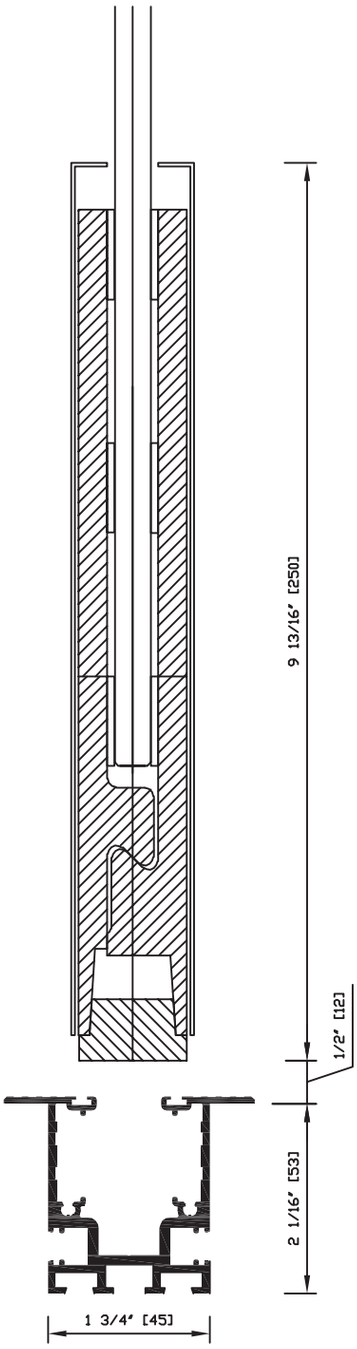

Detail 2.2 Standard Sill

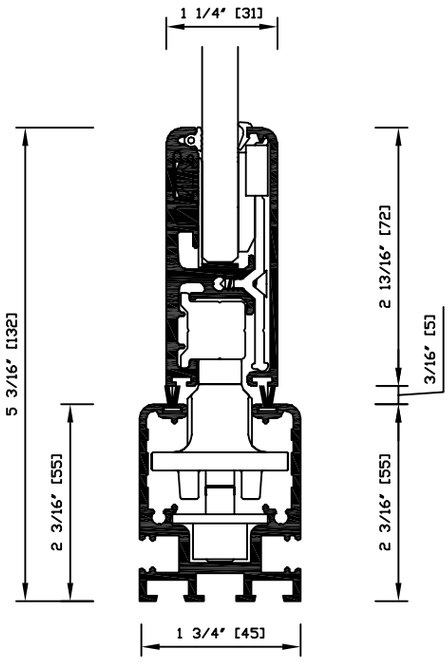

Detail 2.4 Recessed Sill

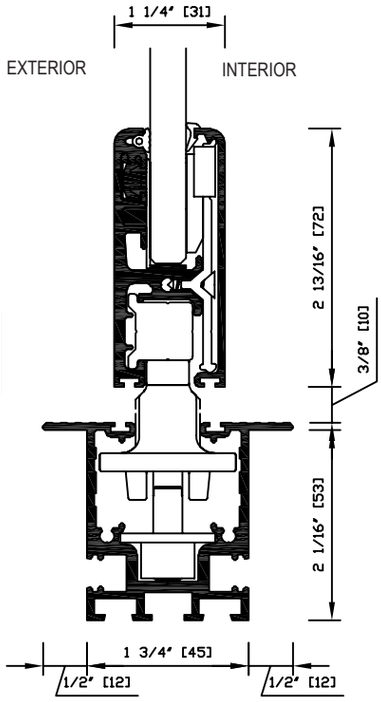

Detail 3.0
Side Jamb - Inswing

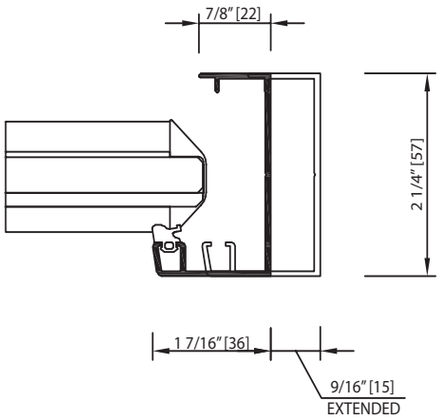

Detail 3.1
Side Jamb - Outswing

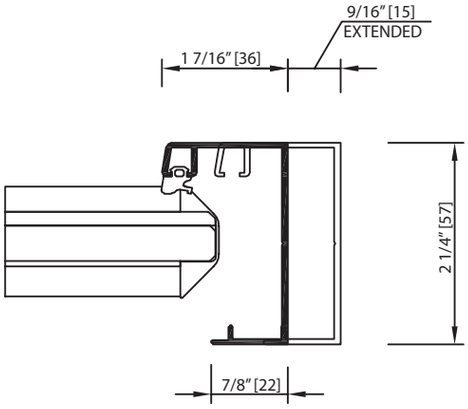

Detail 11.2
Variable angle between two panels.
Any angle from 90° to180° is possible.

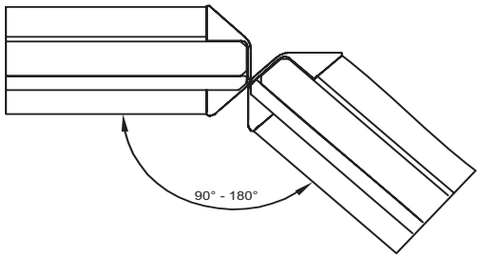

Detail 11.0
Two Sliding Panel Meeting

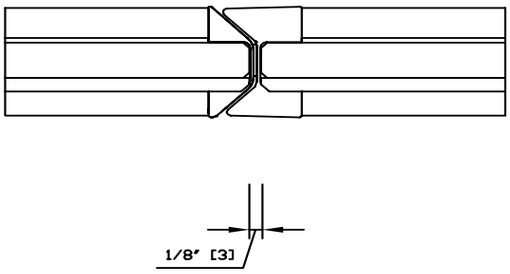

Detail 11.4
Sliding Panel Meeting Turn Panel

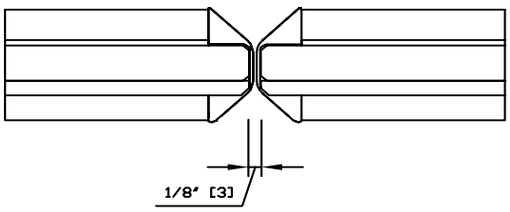

Detail 1.0 (with head compensating profile)

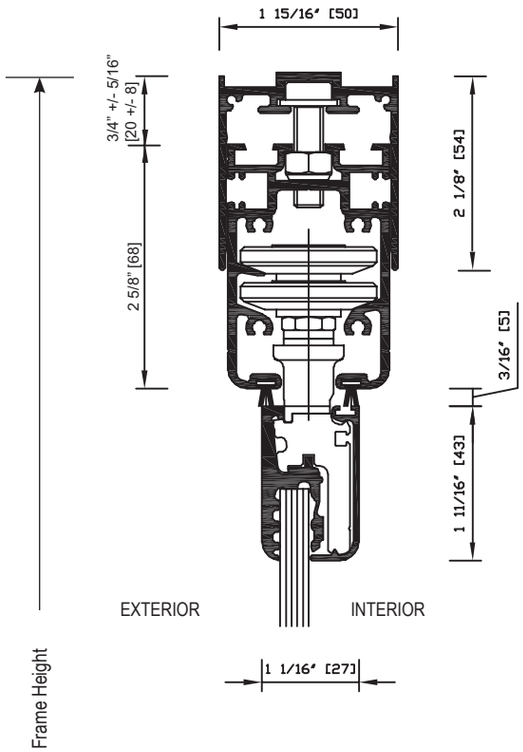

Detail 2.4 Recessed Sill

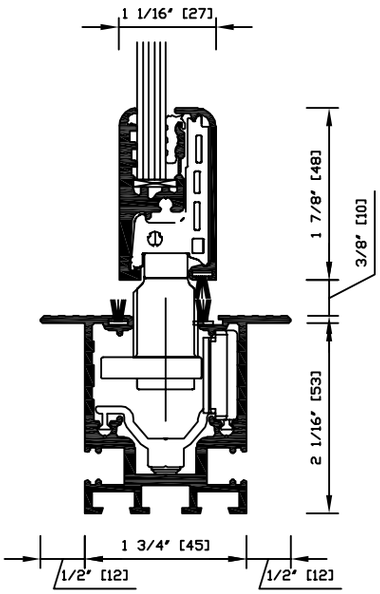

Detail 2.2 Standard Sill

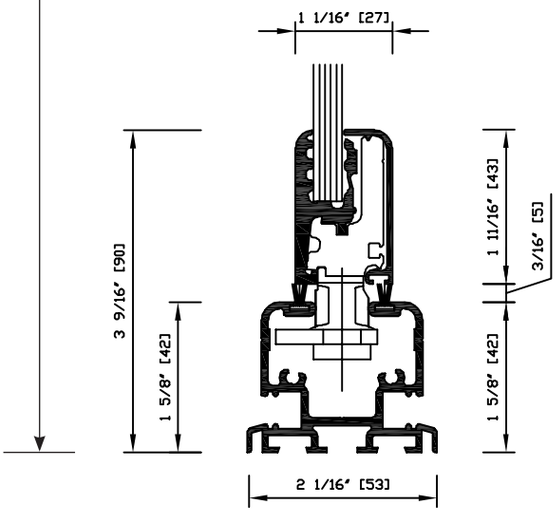

Detail 3.0
Side Jamb at Turn Panel - Inswing

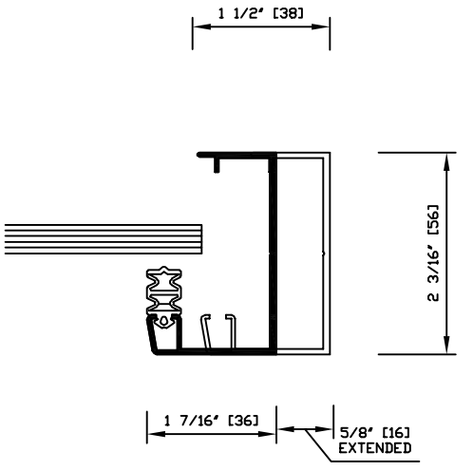

Detail 3.1
Side Jamb at Turn Panel - Outswing

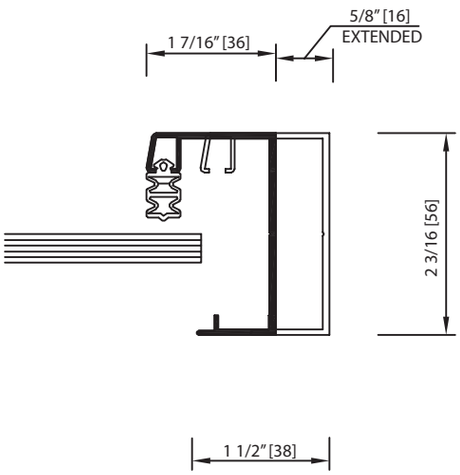

Detail 11.0 & 11.4
Two Panels Meeting

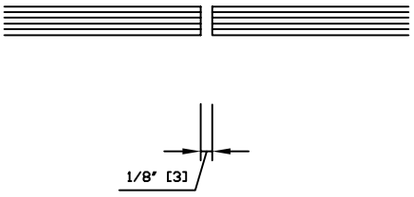

Detail 11.2
Variable angle between two panels.
Any angle from 90° to180° is possible.

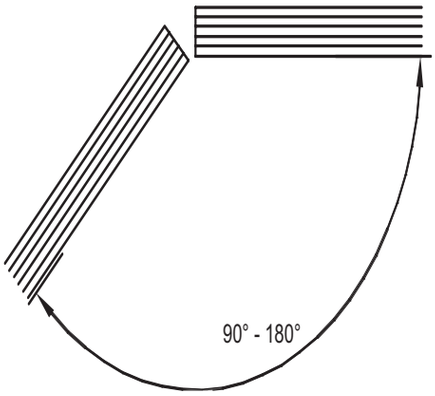

SL25 | Suggested Typical Installation on Inward Opening

Head Jamb
(with head compensating profile)

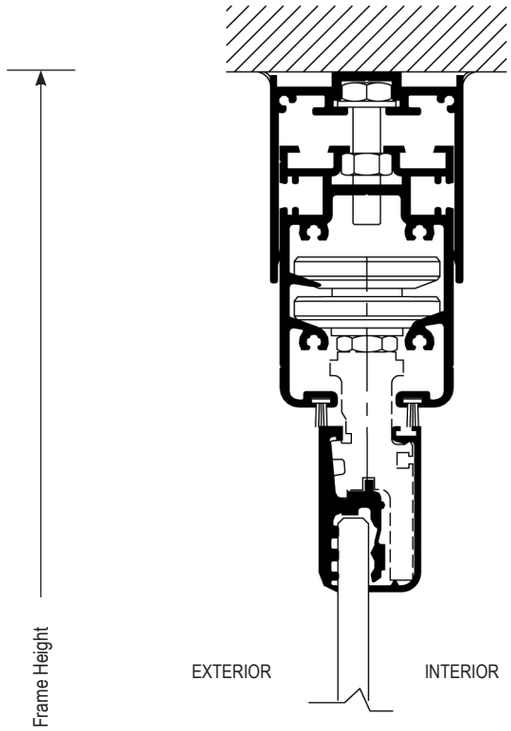

Standard Sill Detail

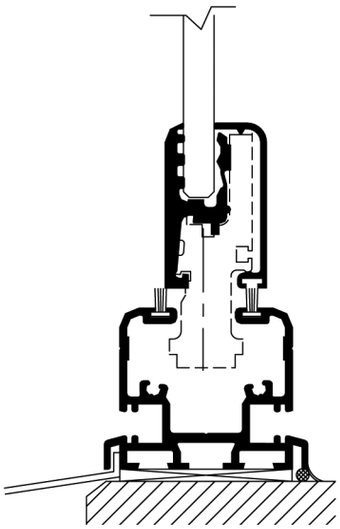

INSTALLATION NOTES

Suggested Typical Installation drawings shown are very general and may not be suitable for any particular installation. Product placement, fasteners, flashing, waterproofing, sealant, trim and other details for specific surrounding conditions must be properly designed and provided by others.

Installation Considerations
The approximate weight of a panel with 1/4”–5/16” glass is 4-5 lbs/sq. ft. and with 3/8”–1/2” glass is 5.5-6.5 lbs/sq. ft. The maximum vertical structural deflection of the header should be the lesser of L/720 of the span and 1/4” under full loads. Structural support for lateral loads (both windload and when the panels are stacked open) must be provided. See “Pre-Installation Preparation and Installation Guidelines” in the General Introduction Section. An owner’s manual with installation instructions is available upon request.

It is recommended that all building dead loads be applied to the header prior to installing the NanaWall. If so and if a reasonable amount of time has been allowed for the effect of this dead load on the header, then only the building's live load can be used to meet the above requirements of L/720 or 1/4”. If not, both the dead and live loads need to be considered.

(Derived from Comparative Analysis) Test Unit Size: 10'6" W x 8'2" H - 6 panels with standard sill and 12 mm glass (only applicable to standard sill)

Reinforced Unit

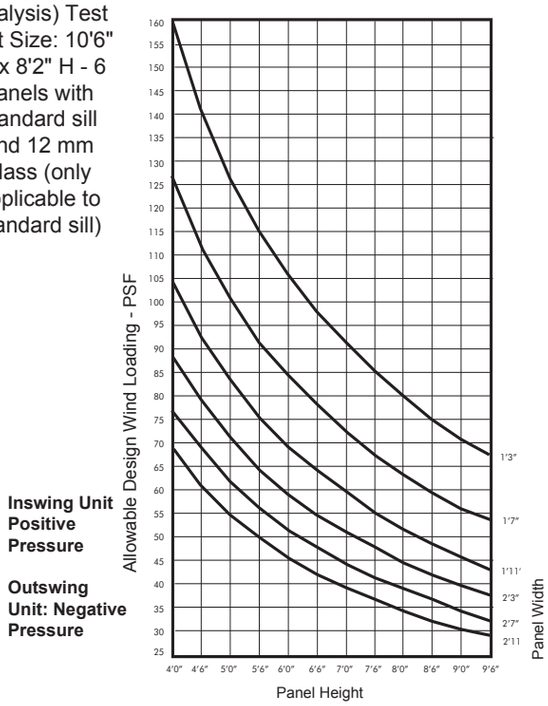

Standard Unit

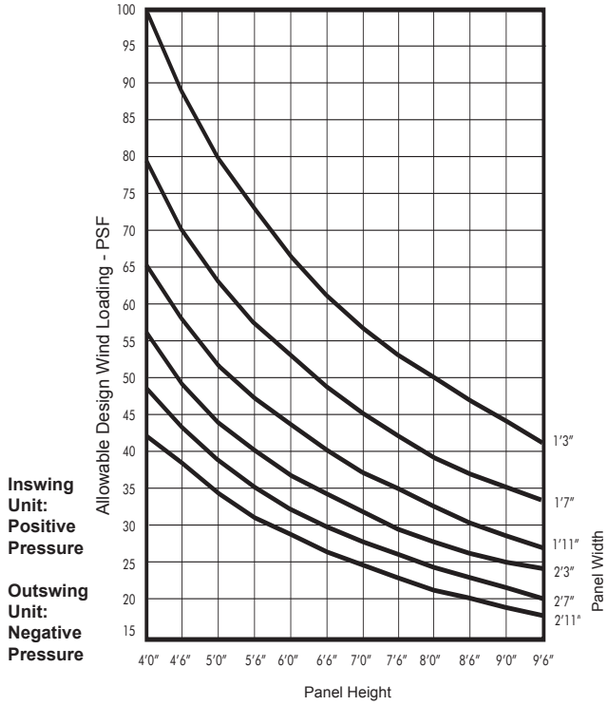

Please note that some jurisdictions may limit the use of these charts or may not accept them at all. Design pressures and/or sizes may be restricted to what was tested. For Florida approved products, please see detailed FL Evaluation Report for restrictions.

Both Reinforced and Standard Unit

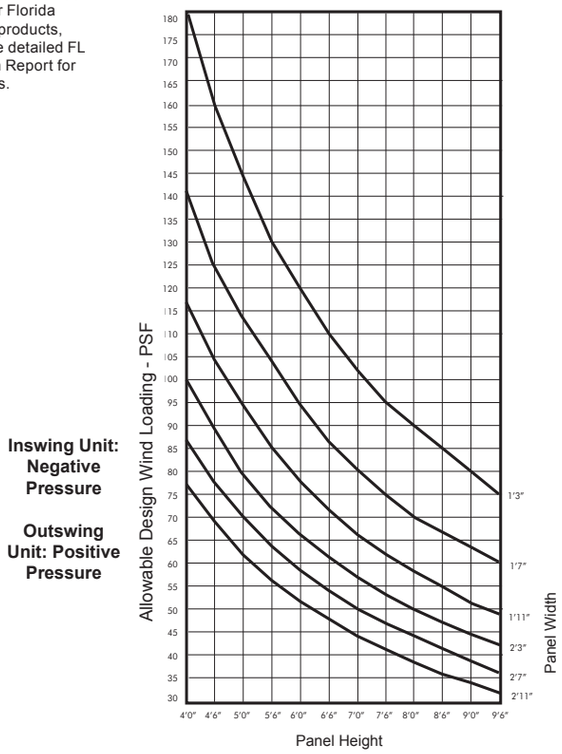

Glass Design in Conformance with ASTM E 1300

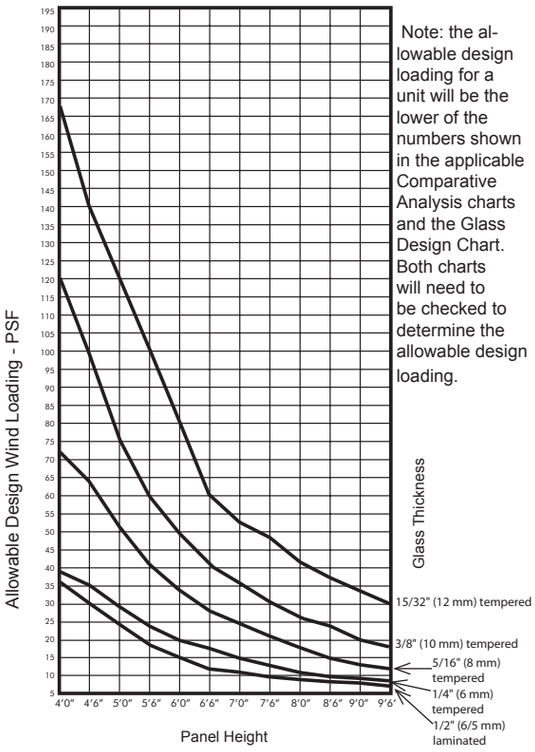

Note: the allowable design loading for a unit will be the lower of the numbers shown in the applicable Comparative Analysis charts and the Glass Design Chart. Both charts will need to be checked to determine the allowable design loading.

NanaWall® SL25 - All Glass Opening Window Wall

Part 1 - General

1.01 Summary

A. Section Includes: Individual panel slide and turn aluminum and glass window system, including aluminum frame, tracks, threshold, sliding panels, swing panels, sliding/swinging and locking hardware, weather stripping, glass and glazing; designed to provide an opening glass window wall, with sizes and configurations as shown on drawings and specified herein, with the SL25 NanaWall®, the All Glass Opening Window Wall System as supplied by NanaWall Systems, Inc.

1.02 References

A. American Architectural Manufacturers Association (AAMA):

1. AAMA 611, Voluntary Specification for Anodized Architectural Aluminum.
2. AAMA 2604, Voluntary Specifications, Performance Requirements and Test Procedures for Pigmented Organic Coatings on Aluminum Extrusions and Panels.

B. American Society for Testing and Materials (ASTM):

1. ASTM E 330, Test Method for Structural Performance of Exterior Windows, Curtain Walls, and Doors by Uniform Static Air Pressure Difference.

C. American National Standards Institute (ANSI):

1. ANSI Z97.1, Safety Performance Specifications and Methods of Test for Safety Glazing Material Used In Buildings.

D. Consumer Product Safety Commission (CPSC):

1. CPSC 16CFR-1201, Safety Standard for Architectural Glazing Materials.

1.03 Submittals

A. Detail Drawings: Indicate dimensioning, direction of swing, configuration, stacking, typical head jamb, side jambs and sill details.

B. Product Data: Manufacturer's literature including Owner's Manual with installation instructions.

C. Contract Closeout Submittal: Submit Owner's Manual from manufacturer. Identify with project name, location and completion date, type and size of unit installed.

1.04 Quality Assurance

A. Manufacturer: Provide complete, precision built, engineered, pre-fitted unit by a single source manufacturer with at least 20 years experience in providing folding/sliding door systems for large openings in the North American market.

1. The manufacturer must have a quality management system registration to the ISO 9001: 2008 standard.
2. The manufacturer must have an environmental management system registration to the ISO 14001: 2005 standard.

B. Performance Requirements: Provide from manufacturer that has independently structurally tested typical units with the following minimum results:

Provide system that when tested according to ASTM E 330 at 150% of positive and negative design pressure with panel sizes of 2' 7" (800 mm) and 8' 2" (2500 mm) with ½" (12 mm) thick glass achieved a DP rating of + 40/ - 45 psf with reinforced system [OR DP rating of +25 / -45 psf with standard system].

** SPECIFIER NOTE: Structural load testing results are only applicable for the test unit size and glass thickness. (Comparative analysis charts published by manufacturer show which panel sizes and glass thickness (if any) would meet structural loading design pressures specifically required for the project. Check for limitations on the use of these charts in the jurisdiction of the project).

C. Installer Qualifications: Installer experienced in the installation of manufacturer's products or other similar products for large openings. Installer to provide reference list of at least 3 projects of similar scale and complexity successfully completed in the last 3 years.

1.05 Warranty

A. Provide manufacturer's standard warranty against defects in materials and workmanship.

B. Warranty Period: Ten years for rollers. For all other components, one year (two years if unit is installed by manufacturer's certified trained installer) from date of delivery by manufacturer.

1.06 Site Conditions, Delivery, Storage and Handling

In addition to general delivery, storage and handling requirements specified in Section 01600, comply with the following:

A. Deliver materials to job site in sealed, unopened cartons or crates.

B. Protect units from damage.

C. Store material under cover, protected from weather and construction activities.

Part 2 – Products

2.01 Supplier

A. NANA WALL SYSTEMS, INC.

707 Redwood Highway, Mill Valley, California 94941

Toll Free (800) 873-5673

Telephone: (415) 383-3148

Fax: (415) 383-0312

Website: www.nanawall.com

Email: info@nanawall.com

2.02 Materials

A. Frame and Panels: Provide head jamb, height compensating profile above head jamb, side jambs, sill, sliding panels, and swing panels with dimensions as shown on drawings. **System without height compensating profile for installation not allowed.**

1. Aluminum Extrusion: Extrusions with nominal thickness of .059" (1.5mm). Alloy specified as AlMgSi 0.5 with strength rated as 6063-T5 or F-22 (European standard). Anodized conforming to AAMA 611, powder coated conforming to AAMA 2604.

2. Aluminum Finish:

Select from NanaWall Powder Coating Finish Chart

[OR clear anodized]

[OR dark bronze anodized]

[OR select from range of RAL high gloss powder coated finishes available from manufacturer]

[OR select from range of RAL matte powder coated finishes available from manufacturer]

[OR custom finish].

B. Glass: All glass to comply with safety glazing requirements of ANSI Z97.1 and CPSC 16CFR 1201. Provide manufacturer's standard heat soak tested, tempered [OR laminated] [OR Ornilux Bird Safe] glass and glazing:

Glass thickness between 1/4" (6 mm) and 1/2" (12 mm) to be determined based on height of unit and design wind load requirements

C. Locking Hardware on Turn Panel: Provide manufacturer's standard patented (US Patent No. 6,618,994) spring tensioned cable and concealed top and bottom latches made of high density plastic operated by pull of cable [OR reinforced with special locking]

D. Sliding Hardware: Provide manufacturer's standard hardware.

1. For each sliding panel, provide 2 two wheeled unidirectional sliding panel carriers with running surface of glass fiber reinforced Polyamide. Carrying capacity of each carrier to be 143 lbs.

[OR 80 lbs. depending on unit height and structural requirements]

E. Light Commercial Swing Door Hardware (if any): Provide manufacturer's standard hardware, if any, consisting of a

Geze 400 floor mounted door closer, bottom rail mounted key cylinder lock and gray anodized aluminum push / pull handles.

F. Other Components:

1. Threshold: Provide standard sill

[OR recessed sill]

2. Weather stripping: Provide manufacturer's standard APTK and brush seals between panels and frame.

3. Provide machine screws for connecting frame components.

2.03 Fabrication

A. Use extruded aluminum frame, panel profiles, sliding hardware, locking hardware, glass and glazing and weather stripping as specified herein to make an opening slide and turn glass window wall. Factory pre-assemble as is standard for manufacturer and ship with all components and installation instructions.

B. Sizes and Configurations: See drawings for selected number and size of panels, and layout of head jamb and sill.

2.04 Accessories (Edit for project requirements.)

A. Provide matching fixed windows, transoms, tilt-turn windows, folding or French doors as per drawings provided.

Part 3 – Execution

3.01 Erection

A. Because of the large dimensions involved and the weight and movement of the panels, verify the structural integrity of the header such that the maximum vertical deflection with live and dead loads is limited to be the lesser of L/720 of the span and 1/4" (6 mm). Structural support for lateral loads such as wind loads and when the panels are stacked open must be provided.

It is recommended that all building dead loads be applied to the header prior to installing the NanaWall. If so and if a reasonable amount of time has been allowed for the effect of this dead load on the header, then only the building's live load can be used to meet the above requirements of L/720 or 1/4" (6 mm). If not, both the dead and live loads need to be considered.

B. Examine surfaces of openings and verify dimensions; verify rough openings are level, plumb, and square, with no unevenness, bowing, or bumps on floor.

C. Installation of units constitutes acceptance of existing conditions.

3.02 Installation

A. Install frame in accordance with manufacturer's recommendations and installation instructions. Properly flash and waterproof around the perimeter of the opening.

B. Installer to provide anchorage devices and to securely and rigidly fit frame in place, absolutely level, straight, plumb and square. Install frame in proper elevation, plane and location, and in proper alignment with other work.

C. If necessary, provide drain connections from lower track.

D. Install panels in accordance with manufacturer's recommendations and installation instructions.

E. If necessary, adjust head jamb and hardware for proper operation.

END OF SECTION

DISCLAIMER: Nana Wall Systems, Inc. takes no responsibility for product selection or application, including, but not limited to, compliance with building codes, safety codes, laws, or fitness for a particular purpose. The guide specifications is not intended to be verbatim as a project specification without appropriate modifications for the specific use intended and the particular requirements of a specific construction project.